Location Hydraulics Report

SR 7 Extension Project Development and Environment (PD&E) Study
From SR 704 (Okeechobee Boulevard) to CR 809A (Northlake Boulevard)
MP 0.000 to MP 8.536
Palm Beach County, Florida
Financial Project ID No. 229664-2-22-01
Federal Aid Project No. 4752-030-P
ETDM No. 8127

Florida Department of Transportation
District 4

October 2011

Draft Location Hydraulic Report

SR 7 Extension Project Development & Environment Study

Florida Department of Transportation

Ft. Lauderdale, FL

FPID No.: 229664-2-22-01

ETDM No. 8127

Draft

June 2011

Stanley Consultants INC.

A Stanley Group Company

Engineering, Environmental and Construction Services - Worldwide

Table of Contents

TABLES

FIGURES

APPENDICES

Section 1

Introduction

1.1 Background

The FDOT, District Four conducted a Project Development & Environment (PD&E) Study that proposes to extend SR 7 from Okeechobee Boulevard (SR 704) to Northlake Boulevard in Palm Beach County, Florida. The purpose of the PD&E Study is to evaluate engineering and environmental data and document information that will aid in determining the type, preliminary design, and location of the proposed roadway extension. The study meets the requirements of the National Environmental Policy Act (NEPA) and other related federal and state laws, rules and regulations. The goal of the study is to develop a proposed "best-fit" roadway improvement and extension strategy that is technically sound, environmentally sensitive and publicly acceptable with minimal community impacts.

This *Location Hydraulics Report* is one of a series of reports generated for PD&E study process of developing various alternatives for the proposed roadway improvements. The purpose of this report is to address encroachment on the base floodplain, and/or action which would facilitate additional base floodplain development. Additionally, the report presents the existing and proposed drainage characteristics as well as background information about the project area's land uses and natural features.

Protection of floodplains and floodways is required by Executive Order 11988, "Floodplain Management", USDOT Order 5650.2, "Floodplain Management and Protection", and Federal-Aid Policy Guide 23 CFR 650A. As discussed in Chapter 24 of the FDOT PD&E Manual (2008), "the intent of these regulations is to avoid or minimize highway encroachments within the 100 year (base) floodplains, where practicable, and to avoid supporting land use development which is incompatible with floodplain values".

1.2 Location

This project proposes to extend SR 7 from its current termination point at Okeechobee Boulevard to Northlake Boulevard in Palm Beach County for a distance of 8.5 miles. The project located west of the Florida's Turnpike between the Village of Royal Palm Beach and the City of West Palm Beach. A project location map is shown in **Figure 1.2.1**.

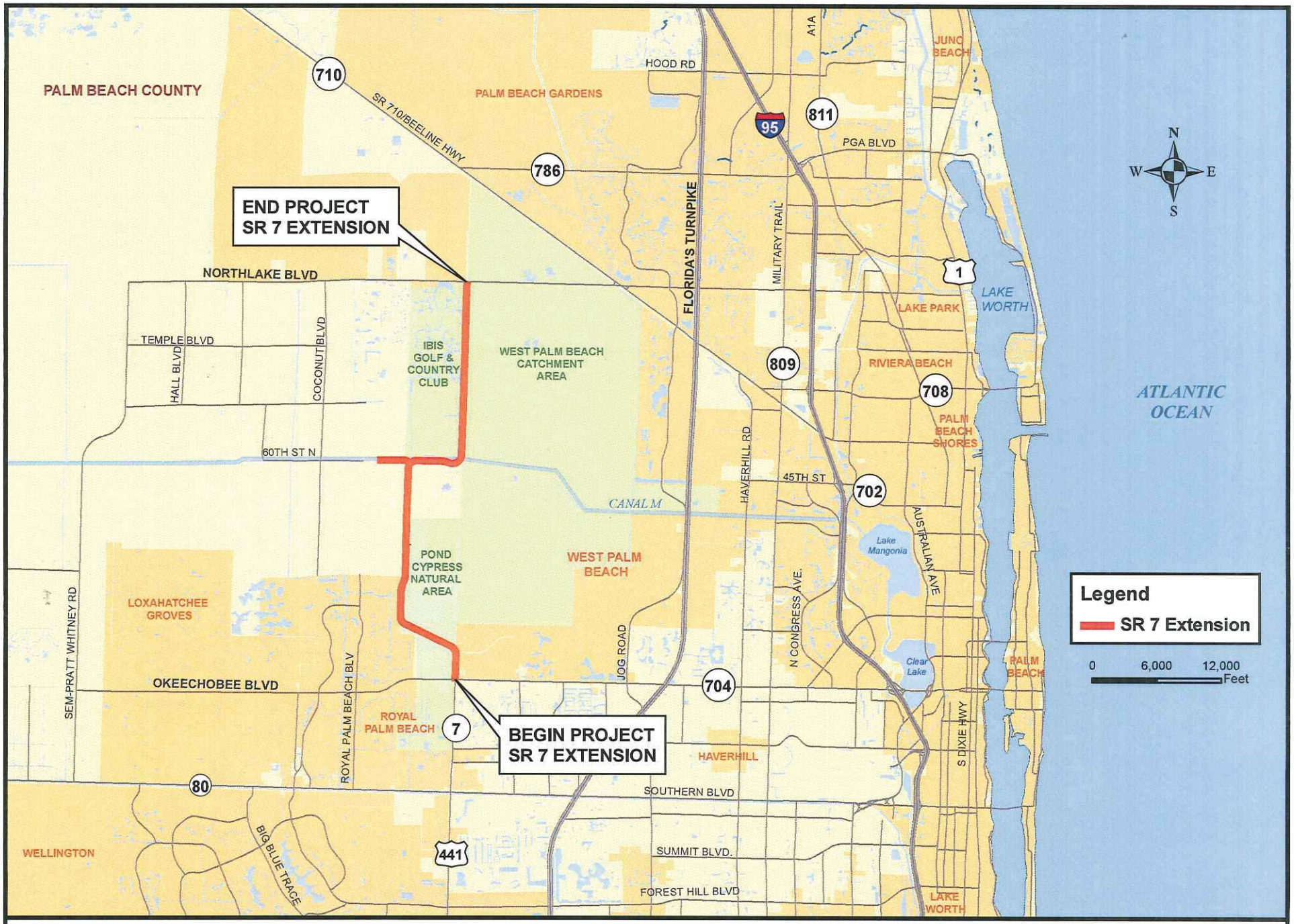

Stanley Consultants INC.

SR 7 EXTENSION
PROJECT LOCATION MAP
January 28, 2009

FIG. 1.2.1

Source: Palm Beach County Data Catalog

Section 2

Project Description

2.1 Existing Site Conditions

In 2009, Palm Beach County completed a two-lane undivided roadway from Okeechobee Boulevard to Persimmon Boulevard for a distance of 3.5 miles along the SR 7 alignment. Plans are now underway by the County for extending this two lane facility one mile to 60th Street. The SR 7 extension project follows the County's two lane alignment to 60th Street and continues to Northlake Boulevard. Proposed improvements under this PD&E Study includes the widening of the existing County facility from two to four lanes from Okeechobee Boulevard to 60th Street and construction of a new four-lane facility from 60th Street to Northlake Boulevard.

The existing typical section from Okeechobee Boulevard to 60th Street consists of a two-lane undivided facility with 12-foot wide lanes. The west side of the roadway includes a 5-foot wide paved shoulder and a 5-foot wide unpaved shoulder. The east side of the roadway includes a 10-foot wide paved shoulder, curb and gutter, guardrail, and a 6-foot wide sidewalk. A fence separates the right-of-way from the Pond Cypress Natural Area. A 50-foot wide dry swale is located 60 feet to the west of the roadway. The right-of-way along this two-lane section varies between 185 to 360 feet. The section adjacent to 110th Street and the Acreage community also includes a 100-foot wide buffer area and a berm. There is one signalized intersection at Okeechobee Boulevard. The non-signalized intersections include the entrance to Porto Sol, Orange Grove Boulevard, and Persimmon Boulevard.

2.2 Study Alternatives

This PD&E Study for the proposed roadway evaluates and analyzes several feasible alternatives for consideration. This includes the No-Build Alternatives and four Build Alternatives.

Transportation Systems Management

The Transportation System Management (TSM) alternative includes those types of activities designed to maximize the use of the existing transportation system. It is a limited construction alternative that uses minor improvements to address the deficiencies identified by the project need. Because the primary purpose of the project is to provide system linkage between Okeechobee Boulevard and Northlake Boulevard, a TSM alternative was not evaluated for this project. Only the Build or No-Build options were considered.

2.2.1 No-Build Alternative

Under the No-Build option, future traffic conditions for the surrounding roadway network, as identified in the 2035 Long Range Transportation Plan (LRTP), are analyzed with the assumption that the proposed improvement is not in place. These traffic projections provide a benchmark for comparative purposes with the other Build options.

Advantages of the No-Build option include the following:

- No right-of-way impacts
- No impacts to wetlands
- No environmental degradation or disruption of natural resources
- No additional noise impacts

Disadvantages of the No-Build option include the following:

- No relief to the increasing traffic demands in the area
- No new access to Northlake Boulevard

2.2.2 Build Alternatives

The Build alternatives include the widening of the County's two lane roadway from Okeechobee Boulevard to 60th Street. New construction will begin at 60th Street and end at Northlake Boulevard. The alignment only varies north of the M-Canal where west and east alignment options are considered. Proposed roadway features would include two 12 ft lanes in either direction, 42 ft wide raised median, 4 ft wide bike lanes, standard curb and gutter, and 6 ft wide sidewalk. The project would be constructed within FDOT or County-owned right-of-way. There is one proposed bridge structure for the crossing over the M-Canal. Additionally, to maintain the controlled discharge from the Ibis Preserve to the Water Catchment Area, either a bridge or culvert will be provided at the existing spreader box outfall located north of

the M-Canal. The design of this crossing will be coordinated with the City of West Palm Beach.

Proposed typical sections along the alignment are presented in **Appendix A** of the report.

Alternative 1 - West Alignment Alternative with Roundabout Option

Alternative 1 proposes to widen the County's extension of SR 7 from a two lane undivided roadway to a four lane divided roadway between Okeechobee Boulevard and 60th Street. The available right-of-way within the County's section varies from 185 to 360 feet and is located along the western boundary of the Pond Cypress Natural Area. At 60th Street, the alignment for Alternative 1 turns east and continues as a new four lane divided facility along the south bank of the M-Canal. At the point where the alignment meets back up with FDOT's right of way, it turns north to cross over the M-Canal and continues along the west side of the existing right-of-way located between the Ibis Golf and Country Club and the Grassy Waters Preserve (also known as the Water Catchment Area). The available right-of-way north of the M-Canal includes a 120-ft wide strip owned by the County and a 200-ft wide strip owned by FDOT for a combined width of 320 feet. Proposed retention swales would be located within the right-of-way between the proposed roadway and the western limit of the Grassy Waters Preserve. Standard features incorporated into the proposed typical section include 12-ft wide lanes, a raised median, curb and gutter, 4-ft wide bike lanes, and 6-ft wide sidewalk on both sides. A roundabout is proposed at the intersection with 60th Street and at the entrance to the Ibis Golf and Country Club.

Alternative 2 - West Alignment Alternative with T-Intersection Option

Alternative 2 is identical to Alternative 1 except that a standard signalized intersection is proposed at 60th Street and at the entrance to the Ibis Golf and Country Club.

Alternative 3 - East Alignment Alternative with Roundabout Option

Alternative 3 proposes to widen the County's extension of SR 7 from a two lane undivided roadway to a four lane divided roadway between Okeechobee Boulevard and 60th Street. The available right-of-way within the County's section varies from 185 to 360 feet and is located along the western boundary of the Pond Cypress Natural Area. At 60th Street, the alignment for Alternative 1 turns east and continues as a new four lane divided facility along the south bank of the M-Canal. At the point where the alignment meets back up with FDOT's right of way, it turns north to cross over the M-Canal and continues along the east side of the existing right-of-way located between the Ibis Golf and Country Club and the Grassy Waters Preserve (also known as the Water Catchment Area). The available right-of-way north of the M-Canal includes a 120-ft wide strip owned by the County and a 200-ft wide strip owned by FDOT for a combined width of 320 feet. Proposed retention swales would be located within the right-of-way between the eastern limits of the Ibis Golf and Country Club and the proposed roadway. Standard features incorporated into the

proposed typical section include 12-ft wide lanes, a raised median, curb and gutter, 4-ft wide bike lanes, and 6-ft wide sidewalk on both sides. A roundabout is proposed at the intersection with 60th Street and at the entrance to the Ibis Golf and Country Club.

Alternative 4 - East Alignment Alternative with T-Intersection Option

Alternative 4 is identical to Alternative 3 except that a standard signalized intersection is proposed at 60th Street and at the entrance to the Ibis Golf and Country Club.

Section 3

Site Information

3.1 Topography

The existing topography is generally level terrain with elevations varying from 17 ft to approximately 21 ft. The surface water flows from a west to east direction and drainage conveyance is achieved by the C-51 Canal.

Two Class 1 Surface Water bodies are within the study area. These water bodies are the City of West Palm Beach Water Catchment area, which provides potable water to the City of West Palm Beach, and the M-Canal, which is also owned by the City of West Palm Beach. The project study site is located in Range 41 East, Township 42 South, Sections 24, 25 and 36 and Township 43 South, Sections 1, 12, 13 and 24.

3.2 Soils

An inventory of the existing soils in the vicinity of the SR 7 Extension was obtained from the USDA *Soil Survey of Palm Beach County*. As indicated in **Figure 3.2.1**, contained in this section of the report, the primary soil types along the corridor are Riviera fine sand and Riviera fine sand depressional.

Soil descriptions taken directly from the soil survey data are provided as follows:

Boca fine sand (+/- 3.0% of site total): This is a nearly level, poorly drained soil that has a loamy subsoil that is underlain by fractured limestone at a depth of 24 to 40 inches. This soil is on broad, low flats and in poorly defined drainage ways between the Everglades and coastal ridge. It has the pedon described as representative of the series. Under natural conditions, the water table is within 10 inches of the surface for 2 to 4 months and is in the limestone during the driest periods.

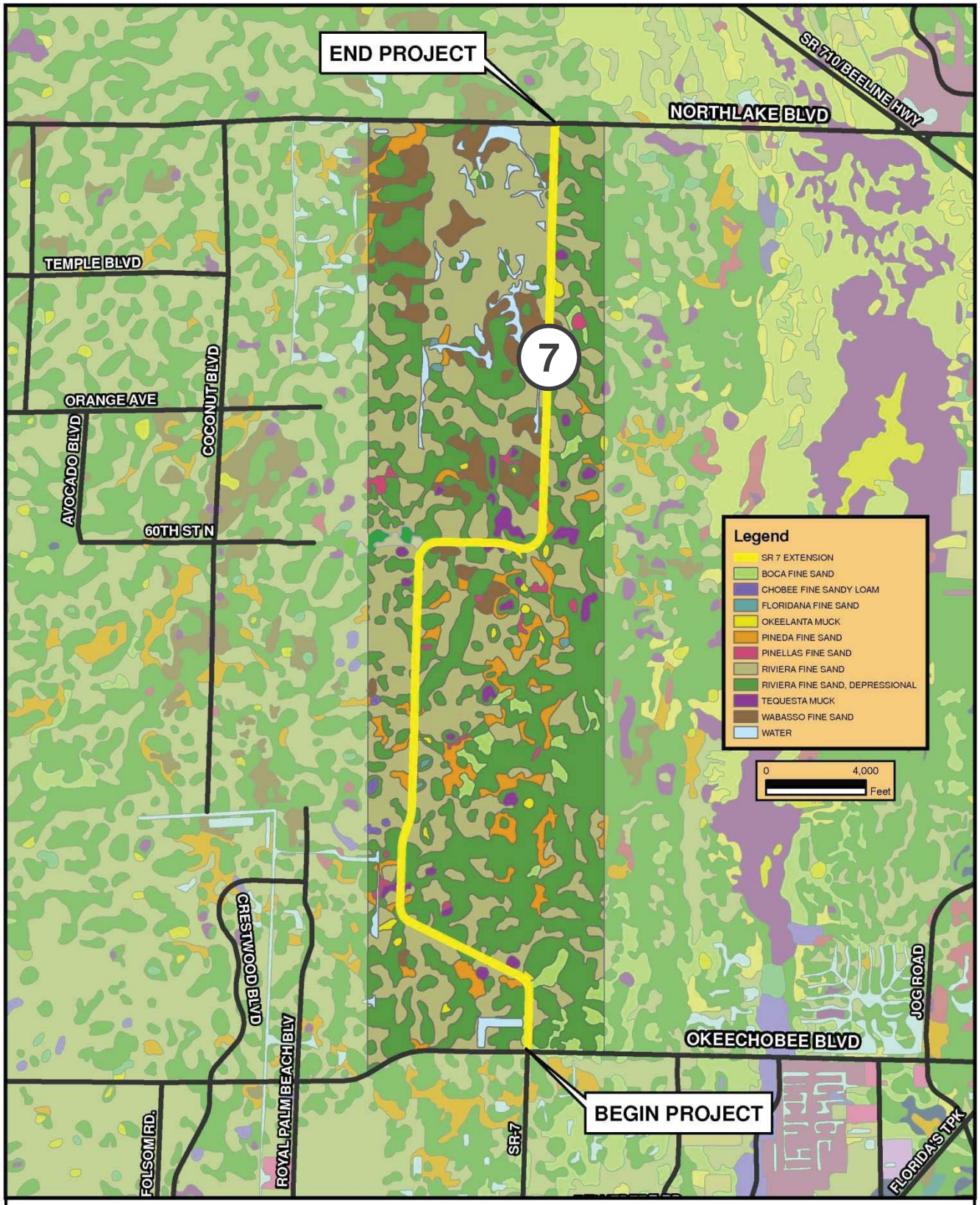

Stanley Consultants INC.

SR 7 Extension
Soil Survey -- Palm Beach County
January 29, 2009

FIG. 3.2.1

Source: US Department of Agriculture Soil Survey

Chobee fine sandy loam (< 1.0% of site total): This is a nearly level, very poorly drained soil that has a surface layer of dark colored fine sandy loam and a subsoil of sandy clay loam. This soil is in depressions and low, nearly level areas between the Everglades and the coastal ridge. It has the pedon described as representative of the series. Under natural conditions, the water table is within 10 inches of the surface for more than 6 months in most years. Depressions are covered by water most of each year.

Floridana fine sand (< 1.0% of site total): This is a nearly level, very poorly drained soil that has a thick, black sandy surface layer and a loamy subsoil. This soil is on broad, low flats and in depressions. It has the pedon described as representative of the series. Under natural conditions, the water table is within 10 inches of the surface for 6 months or more during most years. Depressions are covered by water most of the year.

Okeelanta muck (< 1.0% of site total): This is a nearly level, very poorly drained, organic soil that has sandy mineral material within a depth of 40 inches. It is in large, fresh water marshes and small isolated depressions. It has the pedon described as representative of the series. Under natural conditions, the soil is covered by water, or the water table is within 10 inches of the surface for 6 to 12 months in most years, except during extended dry periods.

Pineda fine sand (+/- 6.0% of site total): This is a nearly level, poorly drained, sandy soil over loamy material. It is on broad, low flatwoods and grassy sloughs. It has the pedon described as representative of the series. Under natural conditions, the water table is within 10 inches of the surface for 1 to 6 months in most years and within 10 to 30 inches most of the remainder of each year, except during extended dry periods. Water covers depressions for 1 to 3 months.

Pinellas fine sand (< 1.0% of site total): This is a nearly level, poorly drained soil that has a sandy, calcareous subsurface layer and a loamy subsoil. This soil is in nearly level areas that border sloughs and depressions. It has the pedon described as representative of the series. Under natural conditions, the water table is within 10 inches of the surface for 1 to 3 months and within 10 to 30 inches for 2 to 6 months in most years.

Riviera fine sand (+/- 40% of site total): This is a nearly level, poorly drained soil that has a thick sandy subsurface layer that tongues into a loamy subsoil at a depth of 20 to 40 inches. This soil is in broad, low areas. It has the pedon described as representative of the series. Under natural conditions, the water table is within 10 inches of the surface for 2 to 4 months in most years and within 10 to 30 inches for most of the remaining year, except during extreme dry periods.

Riviera fine sand depressional (+/- 40% of site total): This is a nearly level, poorly drained soil that has a loamy subsoil. This soil is in shallow well defined depressions. It has a pedon similar to that described as representative of the series, but the surface layer is generally slightly thinner, less than 3 inches thick in most places. All other features are similar, except wetness. This soil is covered with up to 2 feet of water for more than 6 months each year.

Tequsta muck (+/- 1.5% of site total): This is a nearly level, very poorly drained soil that has a thin organic layer on the surface overlying a mineral soil that has a sandy surface layer and a loamy subsoil. This soil is on broad, low flats and in marshes and depressions. Under natural conditions, this soil is covered by water for 4 to 6 months in most years. The water table is within 10 inches of the surface for 6 to 12 months during most years.

Wabasso fine sand (+/- 7.0% of site total): This is a nearly level, poorly drained, sandy soil that has a black weakly cemented sand layer over loamy material. This soil is in broad, flatwoods areas. It has the pedon described as representative of the series. Under natural conditions, the water table is within 10 inches of the surface for 1 to 4 months during most years and between 10 and 40 inches most of the remainder of each year except during extended dry periods.

Hydrologic soil groups were determined from Natural Resources Conservation Service (NRCS) water feature database for each of the primary soil types. *Hydrologic soil groups* are based on estimates of runoff potential. Soils are assigned to one of four groups according to the rate of water infiltration when the soils are not protected by vegetation, are thoroughly wet, and receive precipitation from long-duration storms. The four hydrologic soil groups are:

Group A: Soils having a high infiltration rate (low runoff potential) when thoroughly wet. These consist mainly of deep, well drained to excessively drained sands or gravelly sands. These soils have a high rate of water transmission.

Group B: Soils having a moderate infiltration rate when thoroughly wet. These consist chiefly of moderately deep or deep, moderately well drained or well drained soils that have moderately fine texture to moderately coarse texture. These soils have a moderate rate of water transmission.

Group C: Soils having a slow infiltration rate when thoroughly wet. These consist chiefly of soils having a layer that impedes the downward movement of water or soils of moderately fine texture or fine texture. These soils have a slow rate of water transmission.

Group D: Soils having a very slow infiltration rate (high runoff potential) when thoroughly wet. These consist chiefly of clays that have a high shrink-swell potential, soils that have a high water table, soils that have a hardpan or clay layer at or near the surface, and soils that are shallow over nearly impervious material. These soils have a very slow rate of water transmission.

Table 3-1 summarizes some of the hydrologic characteristics associated with the soils identified on the project corridor. If a soil is assigned to a dual hydrologic group (A/D, B/D, or C/D), the first letter is for drained areas and the second is for undrained areas. *Surface runoff* refers to the loss of water from an area by flow over the land surface. Surface runoff classes are based on slope, climate, and vegetative cover. The concept indicates relative runoff for very specific conditions. It is assumed that the surface of the

soil is bare and that the retention of surface water resulting from irregularities in the ground surface is minimal. The classes are negligible, very low, low, medium, high, and very high. The *months* in the table indicate the portion of the year in which a water table, ponding, and/or flooding is most likely to be a concern. *Water table* refers to a saturated zone in the soil. The water features table indicates, by month, depth to the top (*upper limit*) and base (*lower limit*) of the saturated zone in most years. Estimates of the upper and lower limits are based mainly on observations of the water table at selected sites and on evidence of a saturated zone, namely grayish colors or mottles (redoximorphic features) in the soil. A saturated zone that lasts for less than a month is not considered a water table.

Table 3-1 Soil Hydrology – Palm Beach County Area, FL

Soil Name	Hydrologic group	Surface runoff	Month	Water table	
				Upper limit – *Ft.*	Lower limit – *Ft.*
Boca fine sand	B/D	Very high	June-Oct.	0.0-1.0	>6.0
Chobee fine sandy loam	D	Very high	June-Nov.	0.0-0.5	>6.0
Floridana fine sand	D	Very high	June-Nov.	0.0	>6.0
Okeelanta muck	B/D	Negligible	June-Sept.	0.0	>6.0
Pineda fine sand	B/D	Very high	June-Nov.	0.0-1.0	>6.0
Pinellas fine sand	B/D	High	June-Sept.	0.5-1.5	>6.0
Riviera fine sand	B/D	Very high	June-Dec.	0.0-1.0	>6.0
Riviera fine sand depressional	D	Negligible	June-Dec.	0.0	>6.0
Tequesta muck	D	Negligible	Jan.-Dec.	0.0	>6.0
Wabasso fine sand	B/D	High	June-Sept.	0.5-1.5	>6.0

3.3 Land Use Description

The southern portion of the project follows the existing alignment of the County's two lane extension of SR 7 from Okeechobee Boulevard to Persimmon Boulevard and continues north to the M-Canal through the Pond Cypress Natural Area. The Pond Cypress Natural Area was purchased in 1994 by Palm Beach County through its *Sensitive*

Lands Acquisition Program. The Pond Cypress Natural Area is bordered on the east by the West Palm Beach Water Catchment Area, on the southeast by commercial development, on the west by the La Mancha and Acreage residential developments, and on the north by the M-Canal. The natural area is a patchwork of high quality freshwater wetlands such as cypress swamps, marshes, and wet prairies interspersed with pine flatwoods. It also contains part of the headwaters of the Loxahatchee River, the only federally designated Wild and Scenic River in Florida. The Pond Cypress Natural Area is managed as part of a countywide system of natural areas, protected to maintain the diversity of biological communities and species in Palm Beach County. It is open to the public for environmental education, scientific research, and passive recreation activities such as bird watching, nature walks, and photography.

North of the M-Canal, the study corridor follows the existing FDOT and County right-of-way located between the Water Catchment Area and the Ibis subdivision. The Water Catchment Area is approximately twenty square miles of wetlands that provide the majority of the City's drinking water. Seventy five percent of the City's raw water comes from the preserve. Production wells are used to regulate surface water levels and supplement water supplies in the Water Catchment Area and the City's surface water reservoir system. The recovered water is pumped from the wellfield to the M-Canal where it flows into Lake Mangonia and Clear Lake ultimately discharging into the City's Water Treatment Plant for processing. **Figure 3.3.1** below illustrates the land use.

3.4 Wetland and Vegetative Cover

The Wetland Evaluation Report has been prepared in accordance with Executive Order 11990, *Protection of Wetlands*, dated May 23, 1977, and US Department of Transportation Order 56601 A, *Preservation of the Nation's Wetlands*, dated August 24, 1978. The purpose of this evaluation was to assure the protection, preservation, and enhancement of wetlands to the fullest extent practicable. Ten (10) wetlands and one (1) surface water were individually identified and numbered, since each wetland can include multiple habitat types, constituent habitat types for each wetland were mapped and classified according to US Fish and Wildlife (USFWS) National Wetland Inventory (NWI) methodology. The wetland groups are described in **Table 3-2**.

Stanley Consultants INC.

SR 7 Extension
Land Use, Land Cover -- Palm Beach County
January 29, 2009

FIG. 3.3.1

Source: SFWMD, 2004

Table 3-2 Wetland Acreage within the ROW

Wetland/ Surface Water #	Wetland Type	Description	Size (ac)	Total (ac)
W1	PEM1	Palustrine Emergent Marsh with persistent vegetation	0.01	0.01
W2	PEM1	Palustrine Emergent Marsh with persistent vegetation	7.70	17.27
	PFO3	Palustrine Forested with broad-leaved deciduous vegetation	1.15	
	PFO3/4	Palustrine Forested with broad and needle-leaved evergreen vegetation	8.42	
W3	PEM1	Palustrine Emergent Marsh with persistent vegetation	5.21	12.61
	PFO3/4	Palustrine Forested with broad and needle-leaved evergreen vegetation	7.40	
W4	PEM1	Palustrine Emergent Marsh with persistent vegetation	0.06	1.65
	PFO3	Palustrine Forested with broad-leaved deciduous vegetation	0.25	
	PABHx	Palustrine Aquatic Bed, excavated	1.34	
W5	PEM1	Palustrine Emergent Marsh with persistent vegetation	13.94	41.33
	PSS1	Palustrine Scrub-Shrub with broad-leaved deciduous vegetation	0.58	
	PFO3	Palustrine Forested with broad-leaved deciduous vegetation	2.83	
	PFO4	Palustrine Forested with needle-leaved evergreen vegetation	23.84	
	PABHx	Palustrine Aquatic Bed, excavated	0.14	
W6	PEM1	Palustrine Emergent Marsh with persistent vegetation	1.49	28.45
	PSS1	Palustrine Scrub-Shrub with broad-leaved deciduous vegetation	8.37	
	PFO3	Palustrine Forested with broad-leaved deciduous vegetation	10.02	
	PFO4	Palustrine Forested with needle-leaved evergreen vegetation	0.13	
	PABHx	Palustrine Aquatic Bed, excavated	8.44	
W7	PSS1	Palustrine Scrub-Shrub with broad-leaved deciduous vegetation	7.62	10.78
	PABHx	Palustrine Aquatic Bed, excavated	3.16	
W8	PEM1	Palustrine Emergent Marsh with persistent vegetation	0.02	0.18
	PFO4	Palustrine Forested with needle-leaved evergreen vegetation	0.16	
W9	PFO4	Palustrine Forested with needle-leaved evergreen vegetation	1.29	1.29
W10	PSS1	Palustrine Scrub-Shrub with broad-leaved deciduous vegetation	0.28	0.28
SW1	PUBHx	Palustrine Unconsolidated Bottom, excavated	0.64	0.64
			TOTAL Wetland Acres:	**114.49**

3.5 Historic Flooding

In October 1999 Hurricane Irene generated over 17 inches of rainfall in the project area, which led to the flooding of 29 residences within the Village of Royal Palm Beach (Village) with water depths reaching 6 inches above finished floor elevations. The flooding was primarily attributable to water leaving the Pond Cypress Natural Area which had historically operated as a "closed" wetland system (no positive outfall). Due to the severity of the flooding, Palm Beach County, the Village, City of West Palm Beach and SFWMD agreed to develop a flood protection plan that would be incorporated into the County's two lane extension of SR 7 project planned from Okeechobee Road to Persimmon Boulevard. In the interim an emergency outfall structure was permitted in 2002 (SFWMD Permit #50-05422-P) for the 2449-acre Pond Cypress Natural Area that provided a culvert connection between the Pond Cypress Natural Area and the Village's Canal.

3.6 Existing Drainage

3.6.1 Basin Boundaries

The proposed corridor for the extension of SR 7 is primarily within the C-51 drainage basin as defined by SFWMD. The boundaries of the C-51 Basin are Northlake Boulevard and the Grassy Waters Preserve on the north; to the south by Lake Worth Road; to the west by L-8 and L-40; and to the east by U. S. Highway 1 (US-1). The C-51 basin has a drainage area of approximately 177 square miles and the basin is comprised of two major sub-basins: C-51 West (104 square miles) and C-51 East (73 square miles). Existing SR-7 is generally the boundary between these two major sub-basins. The runoff from various sub-basins within the study area ultimately discharges to the C-51 Canal through a number of lateral and equalizer canals. The tidal gate S-155 located east of US-1 ultimately controls the outfall from the C-51 Canal.

The segment of SR 7 south of the M-Canal (60th Street North) lies within sub-basin 16B of the C-51 Basin which has an area of 3.83 square miles. For the SR 7 project segment north of the M-Canal to Northlake Boulevard, the corridor falls along the boundary of the C-51 Basin and the West Palm Beach Water Catchment (WPBWC) area.

3.6.2 Existing Stormwater Management

Along the study corridor, the final segment of the County's two lane extension of SR 7 from Persimmon Boulevard to 60th Street is currently beginning the construction phase. The proposed stormwater management features are consistent with the previously completed sections and include a closed drainage system to capture the roadway runoff. Water quality and quantity attenuation are achieved via a dry detention swale located along the left side of the roadway that parallels the alignment and overtops into a buffer area provided between the residential developments. The treated runoff is directed south and ultimately discharges off-peak into the La-Mancha pond system.

To provide flood relief for the Pond Cypress Natural Area located adjacent to the roadway, five control structures were permitted to control the water surface elevation within the Pond Cypress Natural Area and allow water to pass under the roadway and into the adjacent buffer area. The flood control drainage structures and cross drains along the existing Western Parkway alignment are as shown in **Figure 4.1.1**.

Section 4

Floodplain Involvement and Classification

4.1 Existing Encroachments

FEMA Flood Insurance Rate Maps (FIRMs) were reviewed for the SR 7 Extension Study corridor. These maps are used to locate flood insurance risk areas, administer floodplain management regulations and mitigate for floodplain impacts from development. According to FIRM Community Panel Number 120192-0050-B October 15, 1982 map revision, the study corridor is located in Zone B which is classified as properties located between the 100 year and 500 year flood boundaries. Immediately adjacent to the study corridor to the east, are areas identified as 100-year base floodplains. These areas just east of the SR 7 study area are classified as Flood Zone 'AO' and Flood Zone 'A'. **Figure 4.1.1** was prepared to illustrate a representation of the flood boundary zones applicable to the project site. A detailed description of the zone designations is included in the figure.

4.2 Proposed Encroachments

The SR 7 Extension alignment is proposed within the existing footprint of the County's two lane extension of SR 7 from Okeechobee Boulevard to 60th Street which does not encroach on the floodplain. The section of the proposed alignment that parallels the M-Canal is also contained in Zone B and therefore outside of the 100-year base floodplain boundary as indicated in **Figure 4.1.1**. The alignment then curves to the left over the M-Canal on a proposed bridge structure. The proposed roadway then turns north along the west side of the existing right-of-way located between the Ibis Golf and Country Club and the Grassy Waters Preserve. This area is also located in Zone B and therefore outside of the 100-year base floodplain boundary. There are no floodplain encroachments due to the proposed project improvements.

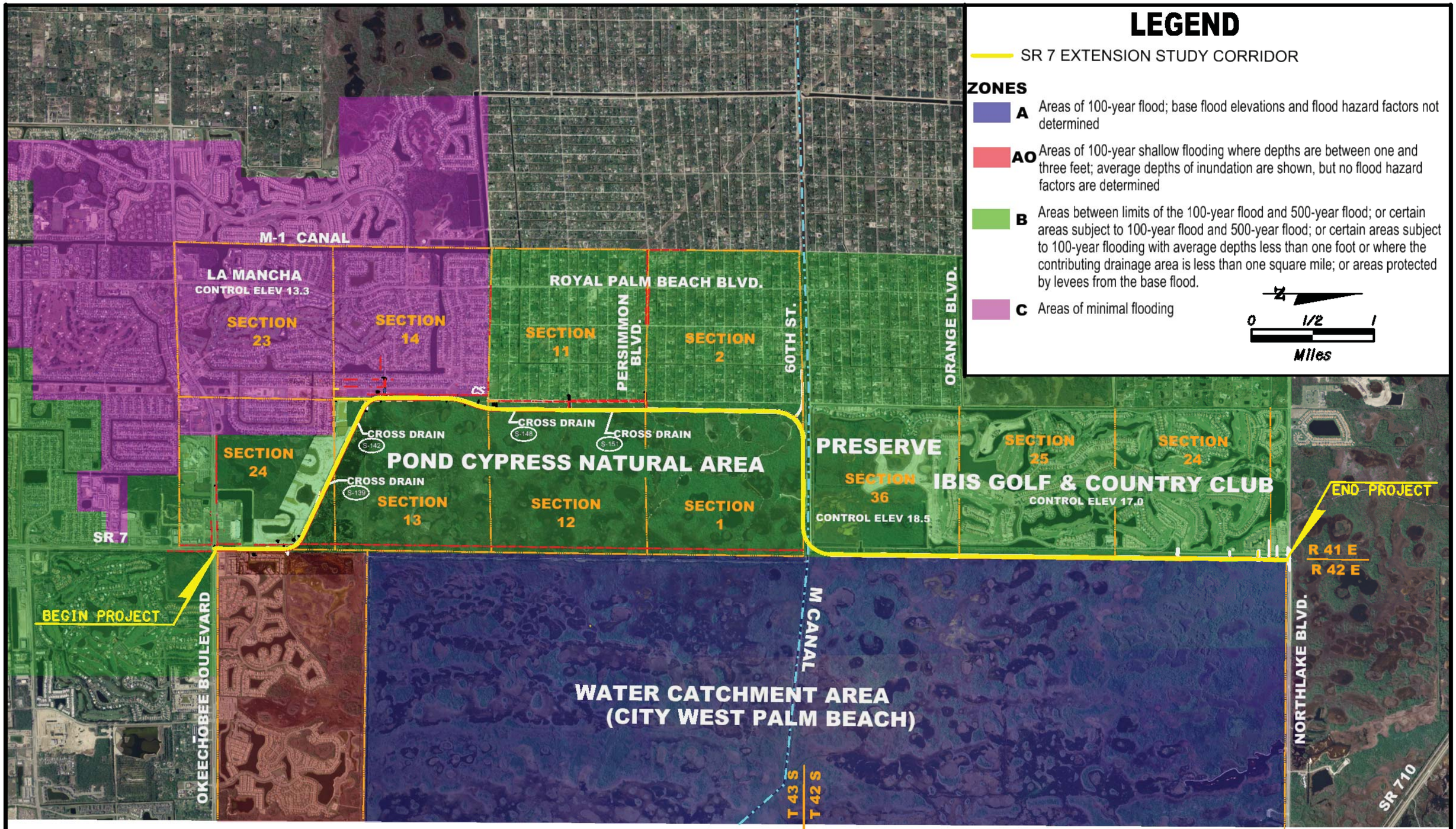

Stanley Consultants INC.

SR 7 EXTENSION
FLOOD ZONES - PALM BEACH COUNTY

FIG. 4.1.1

It has been determined, through consultation with local, state, and federal water resources and floodplain management agencies that there is no regulatory floodway involvement on the proposed project and that the project will not support base floodplain development that is incompatible with existing floodplain management programs.

4.3 Floodplain Criteria

South Florida Water Management District's (SFWMD) *Environmental Resource Permit Information Manual Volume IV* contains set criteria limiting inflows into the C-51 Canal during flood conditions, and minimum finished floor building elevations. Permitting requirements by the SFWMD include addressing basin specific criteria related to floodplains. SFWMD adopted rule **40E-41.263** for the C-51 Basin states as follows: "No net encroachment into the floodplains shall be allowed. Any water storage volume removed from the floodplain must be accommodated by an equal volume of open storage compensation. Water storage volume shall be computed by utilizing Figure 41-9. For the purposes of this part, the minimum volume of water which must be accommodated on site shall be that quantity equal to the volume stored below the level shown on figure 41-9 and above the existing grades. Compensation for any reduction in soil storage also shall be accommodated on site". A copy of figure 41-9 appears in Appendix C.

Section 5

Stormwater Management

From a stormwater treatment design perspective, the project can be divided into three proposed separate stormwater management basins as described below. The proposed stormwater management design will follow the drainage standards of FDOT and procedures of the SFWMD to achieve the water quality and flood attenuation requirements.

Basin 1 for the project begins north of the intersection of SR 7 with Okeechobee Boulevard (SR 704) and extends to 60th Street where an at-grade T-intersection or roundabout type intersection is proposed. In 2005, Palm Beach County, through a modification of Environmental Resource Permit 50-05422-P, constructed two lanes of an ultimate four lane roadway section from Okeechobee Boulevard to Persimmon Boulevard. Additionally, as part of the permit modification, a surface water management system was conceptually approved for a four-lane roadway section from Persimmon Boulevard to 60th Street. The County has submitted a permit application to modify the permit to include the construction of two lanes of the ultimate four-lane roadway from Persimmon Boulevard to 60th Street. The total project area for the corridor from Okeechobee Boulevard to 60th Street was computed to be 178.17 acres which includes impervious, pervious and stormwater management areas. According to the permit modification, the dry detention areas are designed to overflow in a buffer zone located between the road and the homes in the Village of Royal Palm Beach/Indian Trail Improvement District. For permitting the stormwater management systems on the Palm Beach County projects, flood protection modeling was performed to demonstrate that the dry detention, buffer and wet stormwater facilities could retain two 100-year rainfall events of 16 inches in three days occurring seven days apart (zero discharge). Discharge is accepted by the Village of Royal Palm Beach via two control structures (S-154 and S-157) during *off-peak* hours at a rate of ¼ inch per 24 hours. The project plans and permit documents also indicate that five control structures, (S-139, S-142, S-145, S-148, and S-

151) were constructed to control water levels in the Pond Cypress Natural Area by conveying flows under the road into the defined buffer areas.

Reviews of the stormwater treatment calculations, and discussions with the County's Design Engineer, confirm that the planned surface water management system approved and constructed by modification of Environmental Resource Permit 50-05422-P, could accommodate the proposed SR 7 roadway extension under current SFWMD criteria. Preliminary meetings with SFWMD indicate that this segment may qualify for a permit modification if the proposed FDOT improvements are in-line with the County's permit.

Basin 2 extends east/west along the M-Canal from the proposed 60th Street intersection to the bridge over the canal (approximately 1 mile). This area is also adjacent to the Pond Cypress Natural Area and was obtained by Palm Beach County for use as wetlands mitigation for the construction of the 2 lane roadway from Okeechobee Boulevard to Persimmon Boulevard. There is no existing roadway in this proposed basin; however right-of-way is available south of the M-Canal for the SR 7 facility. The amount of impervious area estimated for proposed roadway section in Basin 2 is 13.84 acres. For this segment of the SR 7 Extension, a treatment train methodology consisting of a dry retention swale for water quality followed by a wet detention pond for attenuation is proposed to maximize water quality.

Basin 3 extends north from the M-Canal crossing to Northlake Boulevard. The length of this segment is approximately 3 miles and the available right-of-way width is 320 ft through most of the segment. The proposed roadway corridor falls along the boundary between Ibis and the City of West Palm Beach's Water Catchment Area which is separate from the C-51 Basin. A treatment train methodology consisting of a dry retention swale for water quality followed by a wet detention pond for attenuation is also proposed for this basin to maximize water quality and treatment. There is one proposed bridge structure for the crossing over the M-Canal. Additionally, to maintain the controlled discharge from the Ibis Preserve to the Water Catchment Area, either a bridge or culvert will be provided at the existing spreader box outfall location. The design of this crossing will be coordinated with the City of West Palm Beach.

Appendix A

Typical Sections

PROPOSED ROADWAY TYPICAL SECTION

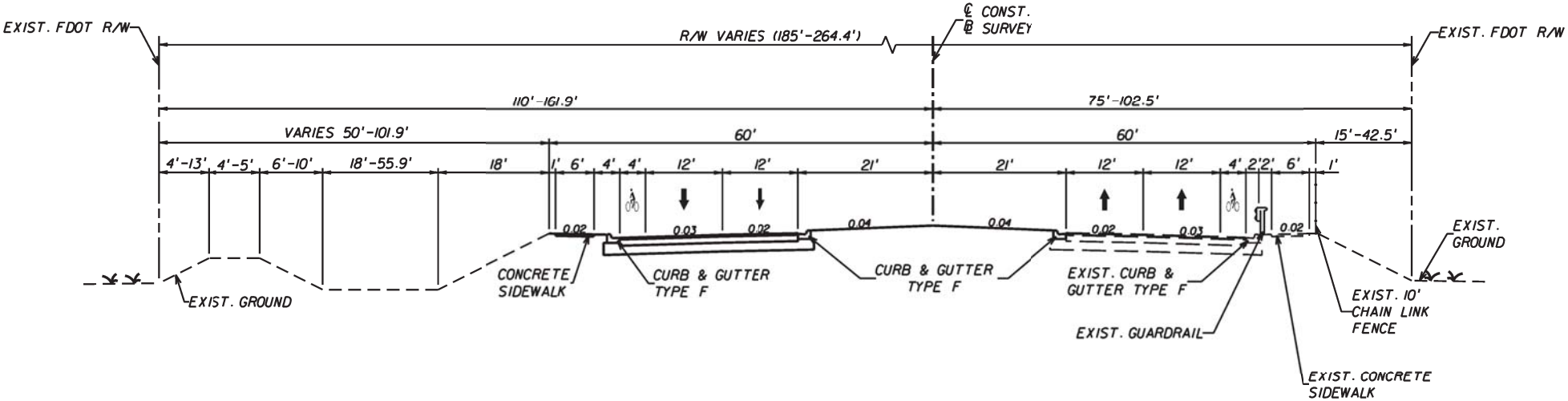

STA. 200+58.65 TO STA. 290+00.00
OKEECHOBEE BLVD. TO MADRID ST.
DESIGN/POSTED SPEED = 45 MPH

N.T.S.

PROPOSED ROADWAY TYPICAL SECTION

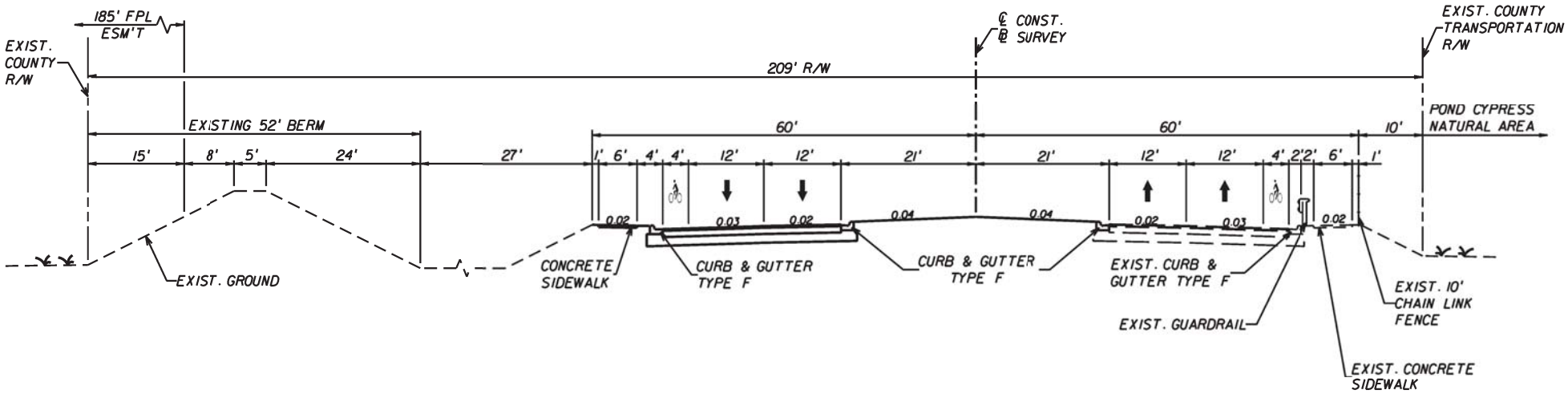

STA. 290+00.00 TO STA. 311+47.20
SECTION ALONG VILLAGE OF ROYAL PALM BEACH
DESIGN/POSTED SPEED = 45 MPH

N.T.S.

PROPOSED ROADWAY TYPICAL SECTION

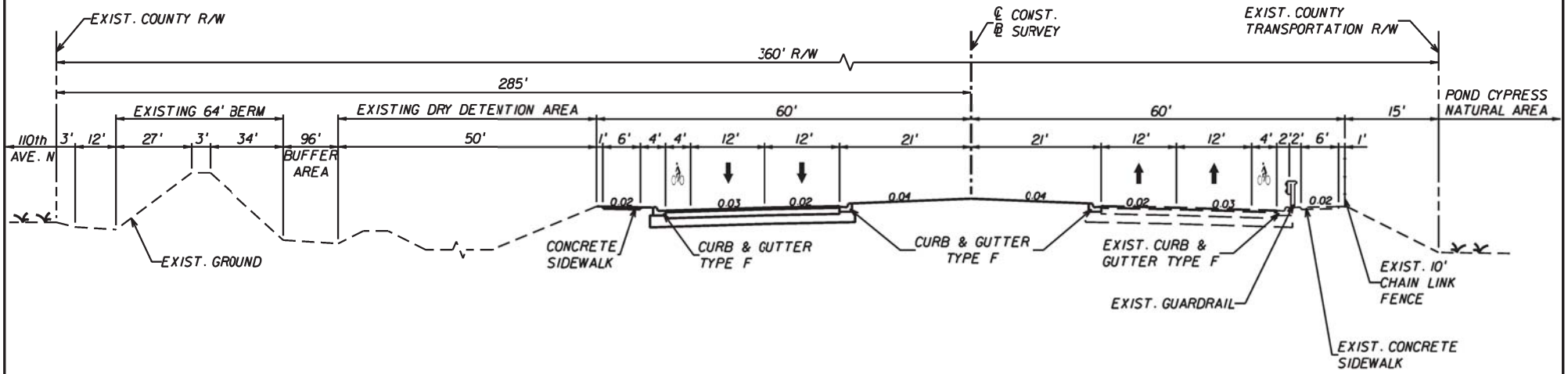

STA. 311+47.20 TO STA. 435+47.07
SECTION PARALLEL TO THE ACREAGE
DESIGN/POSTED SPEED = 45 MPH

N.T.S.

PROPOSED ROADWAY TYPICAL SECTION

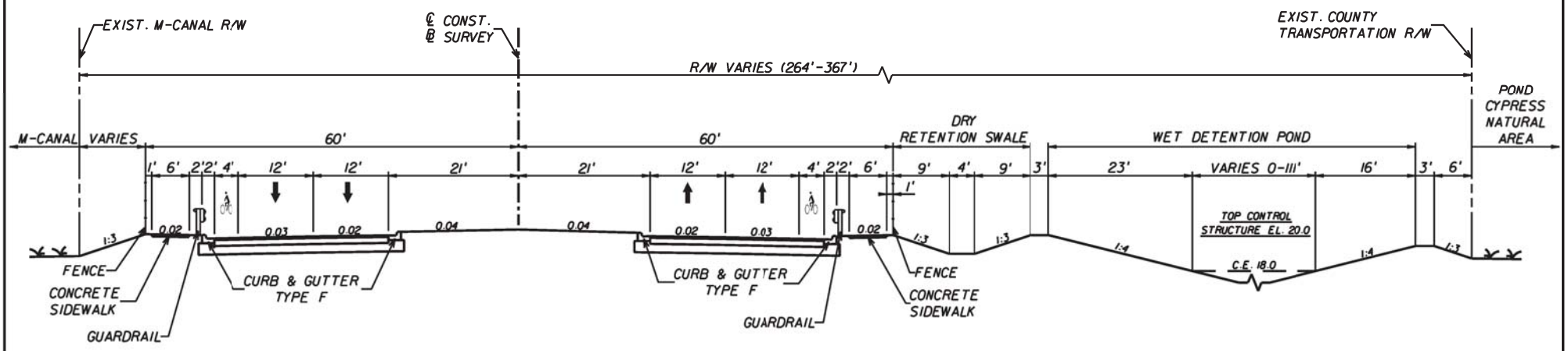

STA. 435+74.07 TO STA. 485+18.09
SECTION PARALLEL TO THE M-CANAL
DESIGN/POSTED SPEED = 45 MPH

N.T.S.

PROPOSED ROADWAY TYPICAL SECTION

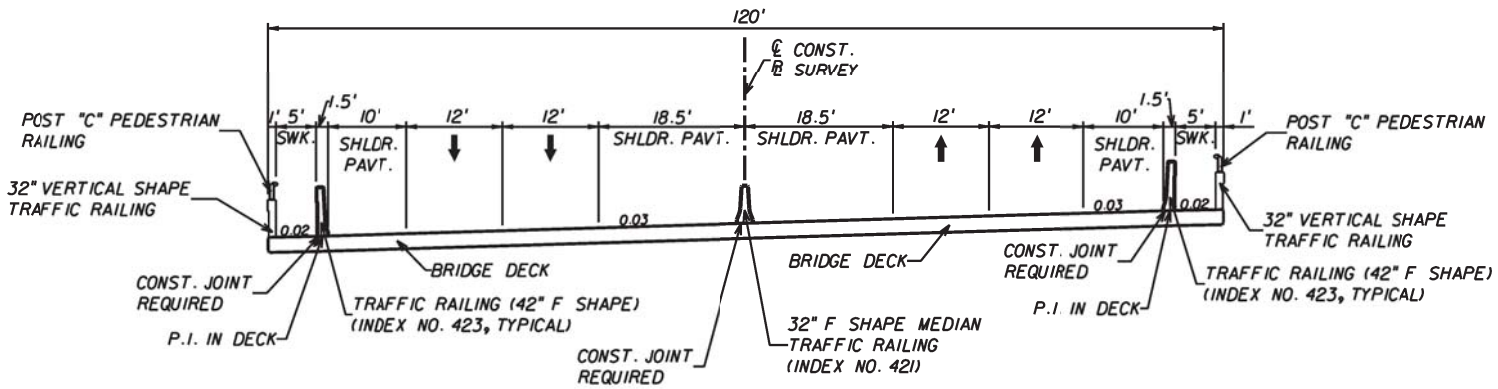

STA. 484+04.75 TO STA. 485+96.90
BRIDGE OVER M-CANAL
DESIGN/POSTED SPEED = 45 MPH

N.T.S.

PROPOSED ROADWAY TYPICAL SECTION

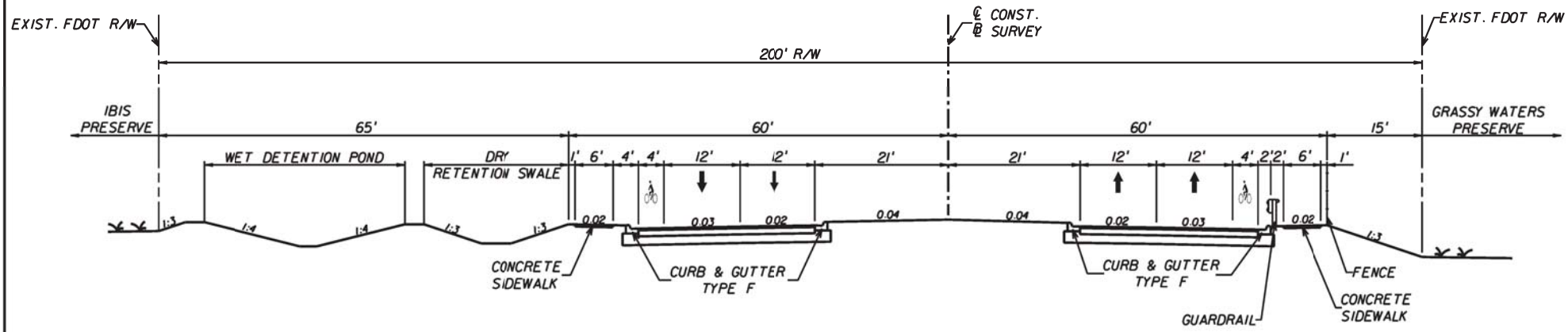

STA. 485+18.07 TO STA. 511+52.64
SECTION PARALLEL TO THE IBIS PRESERVE
DESIGN/POSTED SPEED = 45 MPH

N.T.S.

PROPOSED ROADWAY TYPICAL SECTION

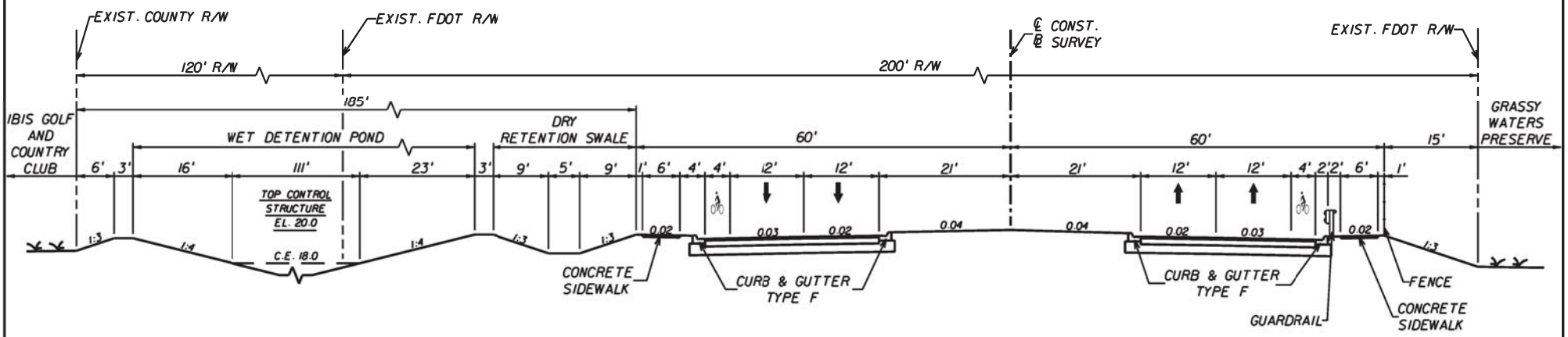

STA. 511+52.64 TO STA. 651+21.04
SECTION PARALLEL TO IBIS GOLF & COUNTRY CLUB
DESIGN/POSTED SPEED = 45 MPH
EAST ALIGNMENT

N.T.S.

PROPOSED ROADWAY TYPICAL SECTION

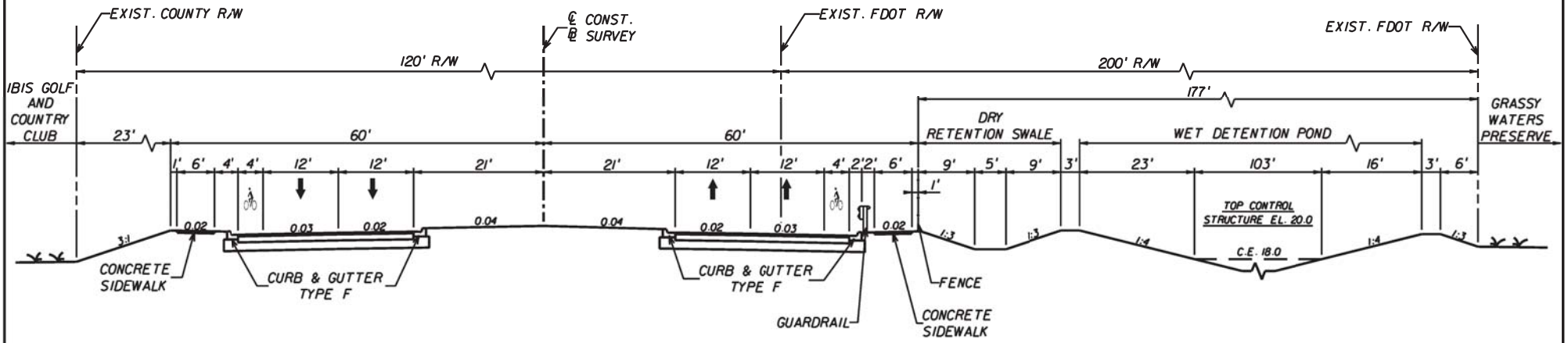

STA. 511+52.64 TO STA. 651+21.04
SECTION PARALLEL TO IBIS GOLF & COUNTRY CLUB
DESIGN/POSTED SPEED = 45 MPH
WEST ALIGNMENT

N.T.S.

Appendix B

FEMA Flood Insurance Rate Maps (FIRM)

To determine if flood insurance is available in this community, contact your insurance agent, or call the National Flood Insurance Program, at (800) 638-6620.

APPROXIMATE SCALE
1 0 1 MILE

NATIONAL FLOOD INSURANCE PROGRAM

FIRM
FLOOD INSURANCE RATE MAP

PALM BEACH COUNTY, FLORIDA
(UNINCORPORATED AREAS)

PANEL 50 OF 245
(SEE MAP INDEX FOR PANELS NOT PRINTED)

COMMUNITY-PANEL NUMBER
120192 0050 B

MAP REVISED:
OCTOBER 15, 1982

APPROXIMATE SCALE
1 0 1 MILE

NATIONAL FLOOD INSURANCE PROGRAM

FIRM
FLOOD INSURANCE RATE MAP

PALM BEACH COUNTY, FLORIDA
(UNINCORPORATED AREAS)

PANEL 50 OF 245
(SEE MAP INDEX FOR PANELS NOT PRINTED)

COMMUNITY-PANEL NUMBER
120192 0050 B

MAP REVISED:
OCTOBER 15, 1982

Federal Emergency Management Agency

NATIONAL FLOOD INSURANCE PROGRAM

FIRM
FLOOD INSURANCE RATE MAP

CITY OF
WEST PALM BEACH, FLORIDA
PALM BEACH COUNTY

MAP INDEX
PANELS PRINTED: 5, 10, 15, 20

COMMUNITY-PANEL NUMBERS
120229 0001-0020

EFFECTIVE DATE:
MARCH 1, 1979

U.S. DEPARTMENT OF HOUSING AND URBAN DEVELOPMENT
FEDERAL INSURANCE ADMINISTRATION

Appendix C

Peak Flood Stage (100 Year Storm)

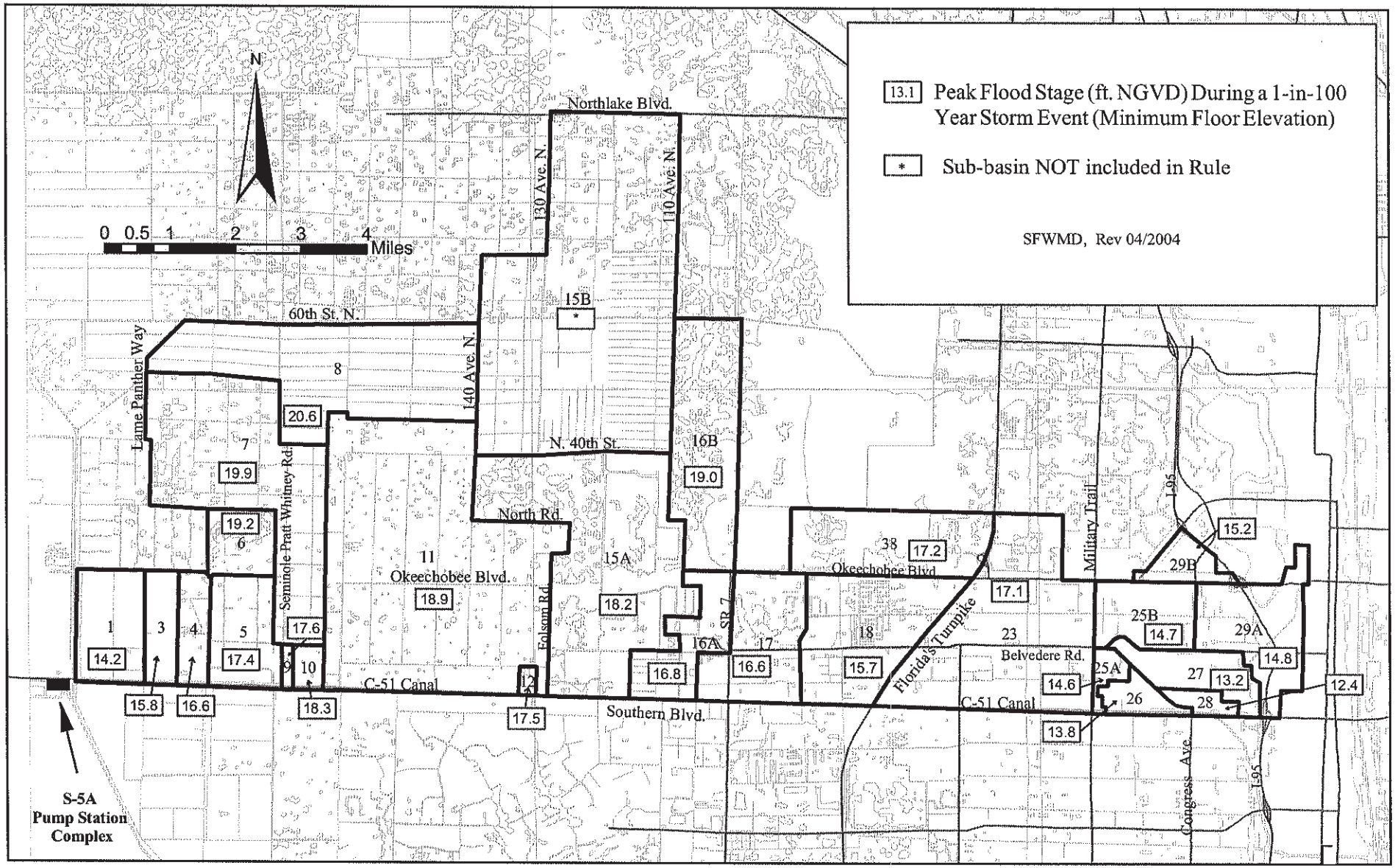

Peak Flood Stage (ft. NGVD) During a 1-in-100 Year Storm Event and Minimum Floor Elevation
Figure 41-9
Plate 1 of 2